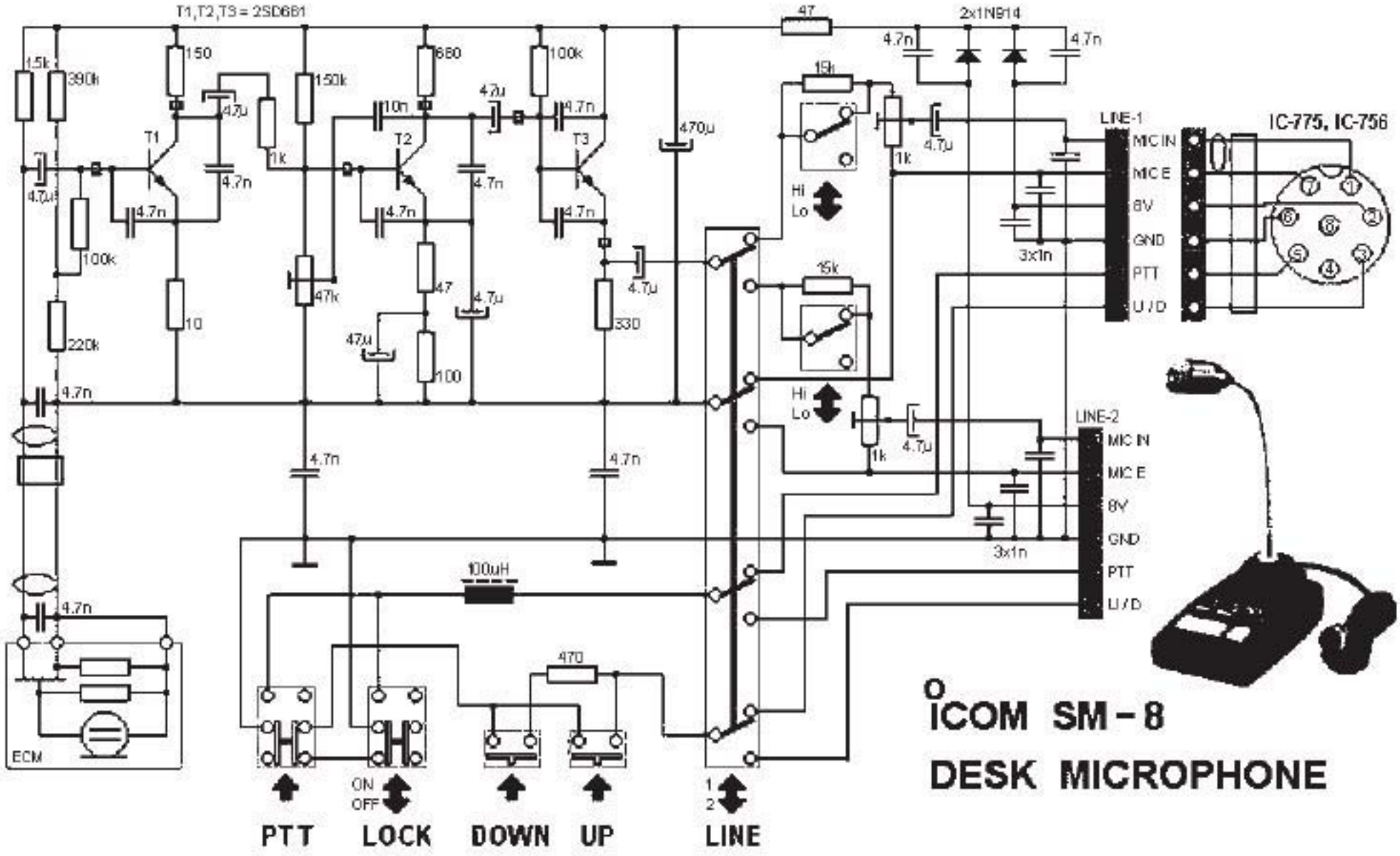

ICOM SM-8
DESK MICROPHONE