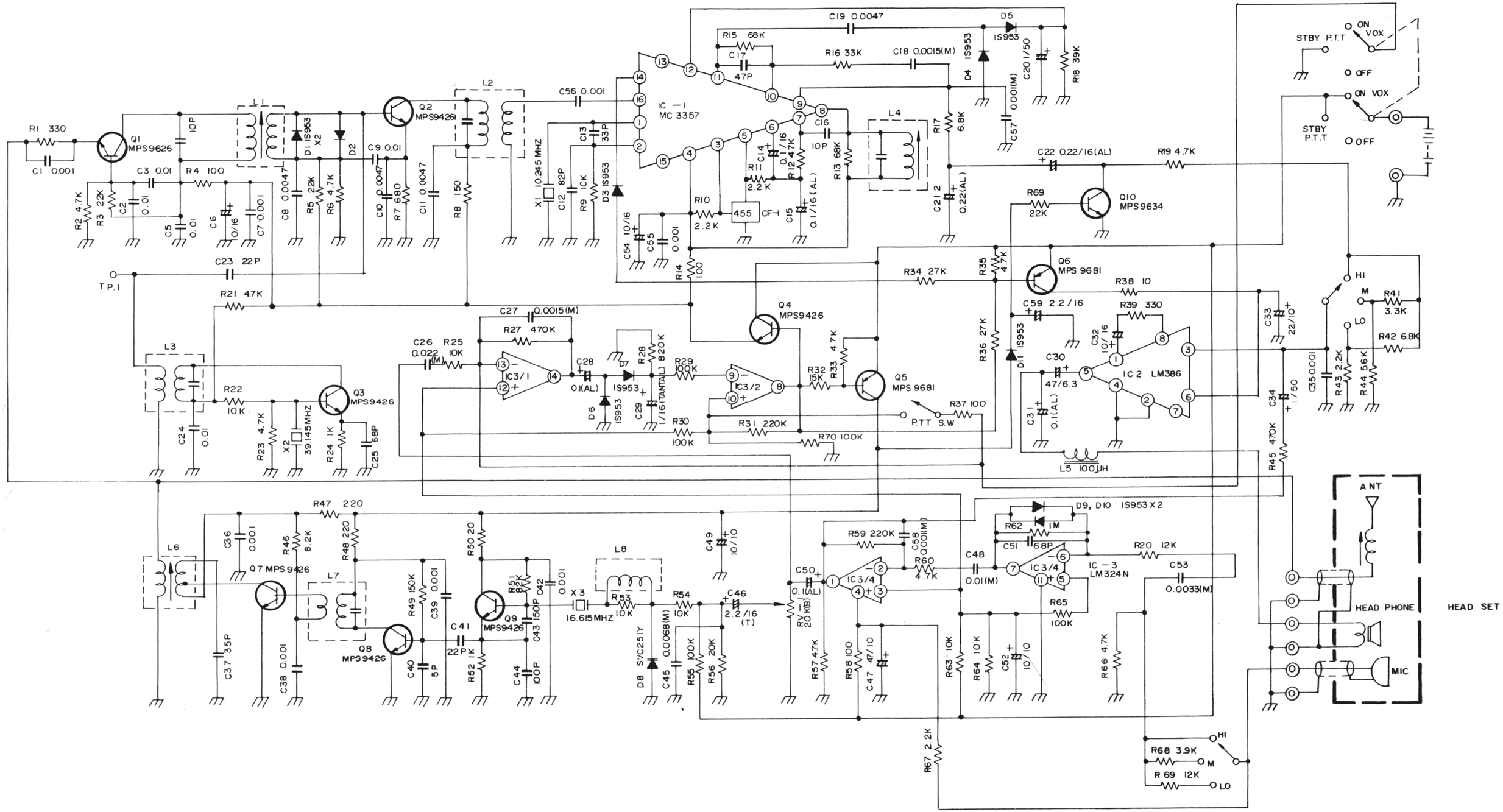
R1 330
C1 0.001
Q1 MPS9626
10P
L1
D1 IS953
X2
D2
Q2 MPS9426
L2
C56 0.001
IC-1 MC 3357
C19 0.0047
D5 IS953
R15 68K
C17 47P
R16 33K
C18 0.0015(M)
D4 IS953
C20 1/50
R18 39K
C57 0.001(M)
STBY P.T.T
ON VOX
OFF
C3 0.01
R4 100
C9 0.01
C13 33P
X1 10.245 MHZ
C12 82P
R9 10K
D3 IS953
C16 10P
R13 68K
L4
R17 6.8K
C22 0.22/16(AL)
R19 4.7K
R69 22K
Q10 MPS9634
C23 22P
T.P.1
R21 4.7K
R10 2.2K
455 CF-1
C15 0.1/16(AL)
C21 2 0.22(AL)
C54 10/16
C55 0.001
R14 100
R34 27K
R35 4.7K
Q6 MPS 9681
R38 10
HI
M
LO
R41 3.3K
R42 6.8K
C27 0.0015(M)
R27 470K
Q4 MPS9426
C59 2.2/16
R39 330
C33 22/10
C26 0.022(M)
R25 10K
IC3/1
C28 0.1(AL)
D7 IS953
R28 820K
R29 100K
IC3/2
R32 15K
R33 4.7K
Q5 MPS 9681
R36 27K
D11 IS953
C30 47/6.3
C32 10/16
IC 2 LM386
R43 2.2K
R44 5.6K
C35 0.001
L3
R22 10K
Q3 MPS9426
D6 IS953
C29 1/16(TANTAL)
R30 100K
R31 220K
R37 100
P.TT S.W
R70 100K
C31 0.1(AL)
L5 100μH
C34 1/50
R45 470K
C24 0.01
R23 4.7K
X2 39.145MHZ
R24 1K
C25 68P
R47 220
L6
C36 0.001
R46 8.2K
R48 220
Q7 MPS9426
L7
R50 20
R49 150K
C39 0.001
Q9 MPS9426
R51 8.2K
C42 150P
C43 100P
C44 100P
C41 22P
Q8 MPS9426
C40 5P
R52 1K
C37 35P
C38 0.001
X3 16.615MHZ
R53 10K
L8
R54 10K
C46 2.2/16 (T)
D8 SVC251Y
C45 0.0068(M)
R55 100K
R56 20K
C49 10/10
C50 0.1(AL)
RV 20KΩ
R59 220K
C58 0.001(M)
R60 4.7K
IC 3/4
C48 0.01(M)
D9, D10 IS953X2
R62 1M
C51 68P
IC-3 LM324N
R20 12K
C53 0.0033(M)
R65 100K
R57 4.7K
R58 100
C47 47/10
R63 10K
R64 10K
C52 10/10
R66 4.7K
R67 2.2K
R68 3.9K
R69 12K
ANT
HEAD PHONE
MIC
HEAD SET